Long Buck Valve

125WSP @ 350°F Max

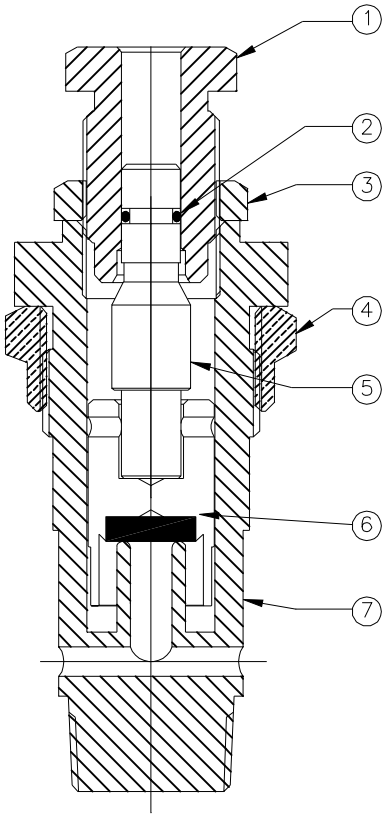

MATERIAL OF CONSTRUCTION

NO.	DESCRIPTION
1	Stem Guide
2	O-Ring VITON®
3	Guide Lock Nut
4	Body Lock Nut
5	Stem
6	Disc Holder
7	Body

					SIZE		DATE	29 JAN 2015	VALVEXCEL™ SOLUTIONS INDIA PVT. LTD.
					TYPE		DRN	MDBS	
					METAL		CHECK	BS	
R.NO	REVESION	CHKD	APD.	DATE	SCALE	N.T.S	DRN NO.		TITLE:- VXL-BUCK VALVE